The following scan is taken from a PIC article that appeared in the February/March 1992 issue of Circuit Cellar magazine. The circuit allows you to store 4 channels of input, and then display the data on a standard analog oscilloscope. The source code for this project is called DIGSCOPE.SRC, and may be found on the Parallax BBS and ftp sight.

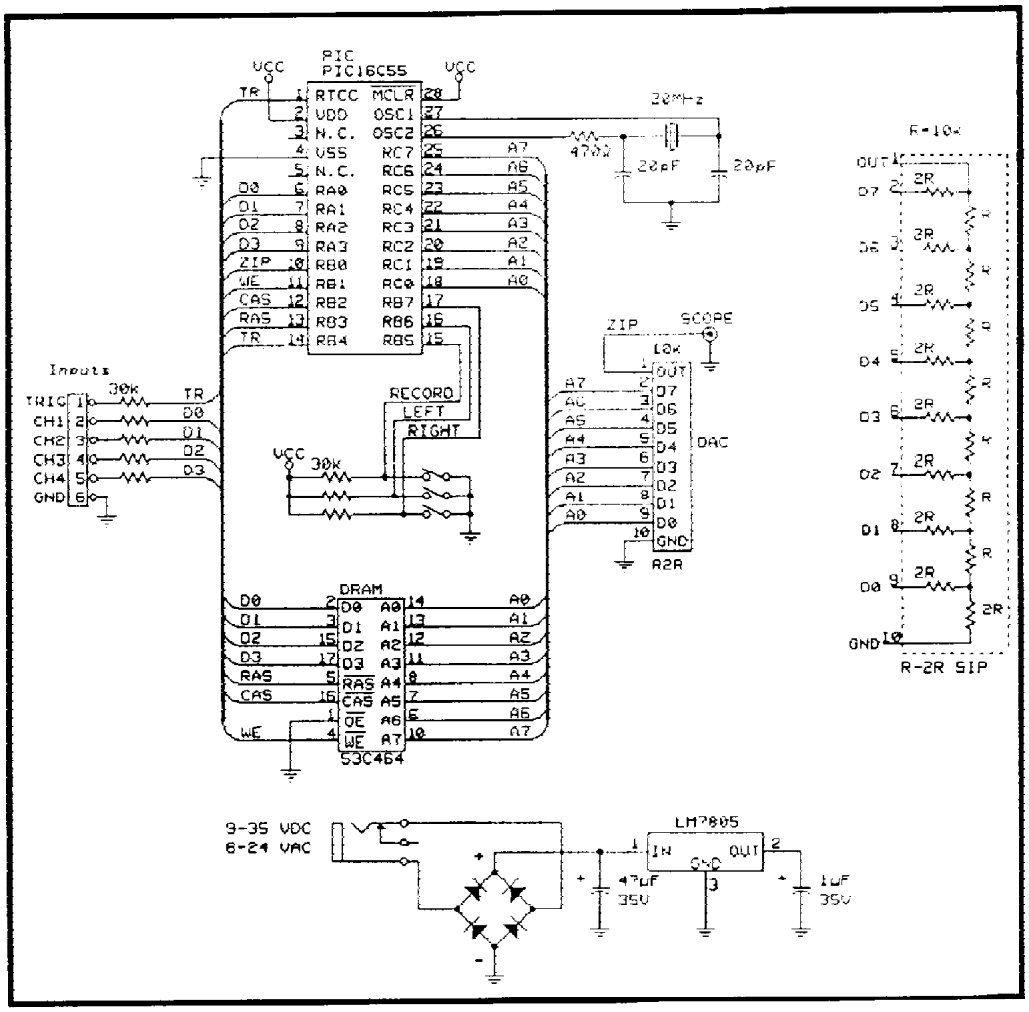

Figure 5—*A simple PIC application records up to four channels of input with time/trigger clocking. The output goes to a regular oscilloscope for display. A basic resistor ladder DAC keeps cost down.*